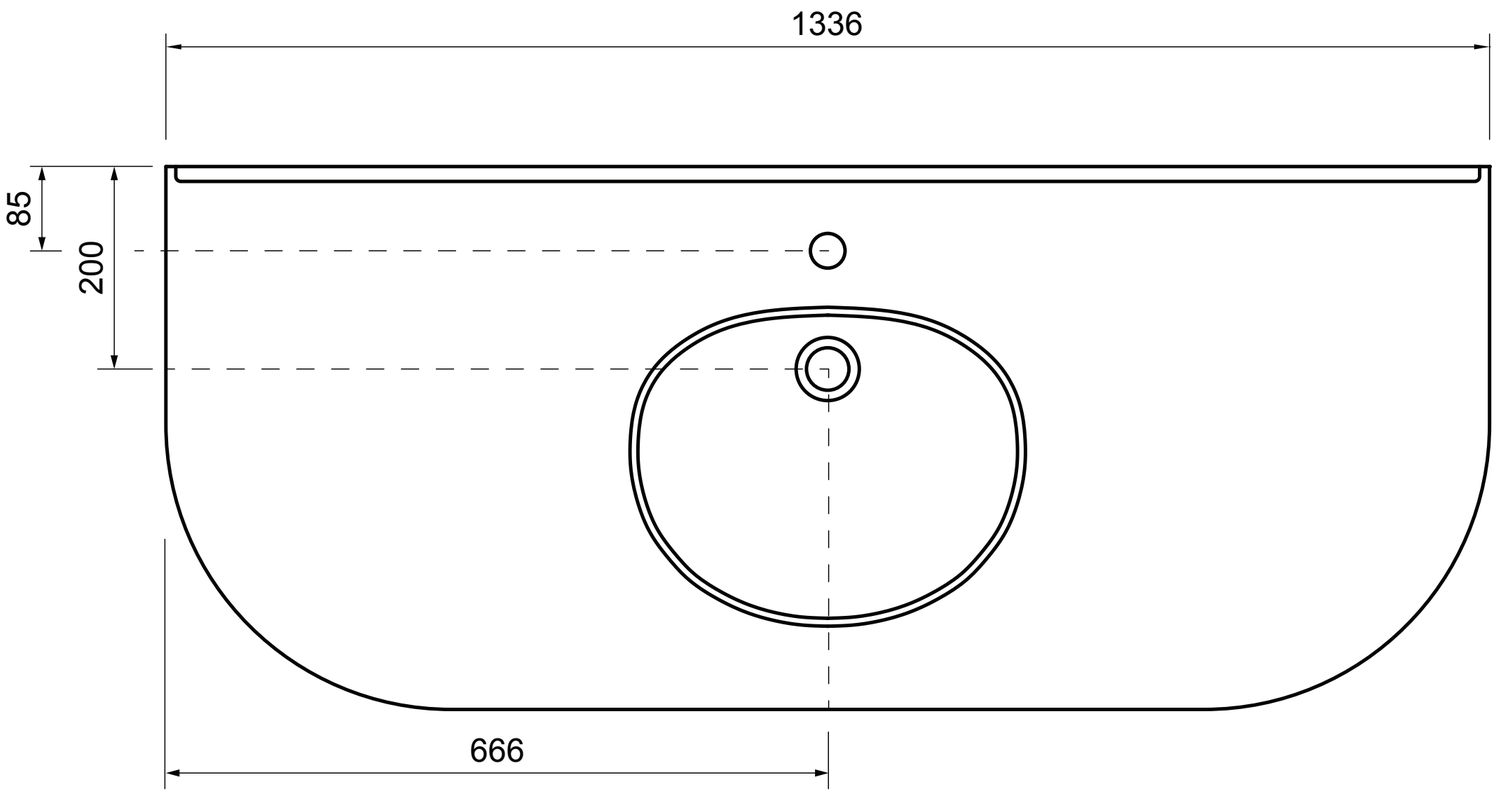

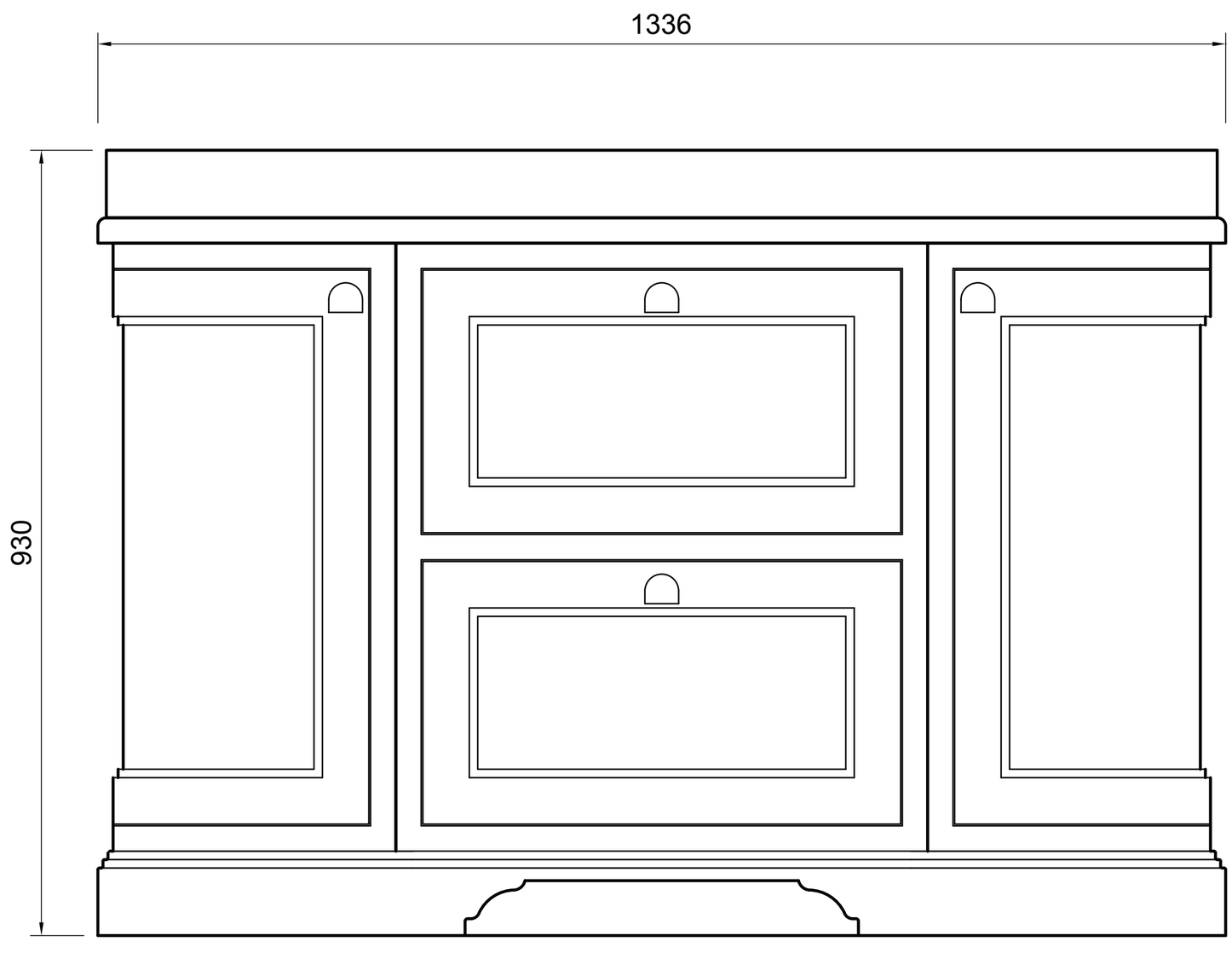

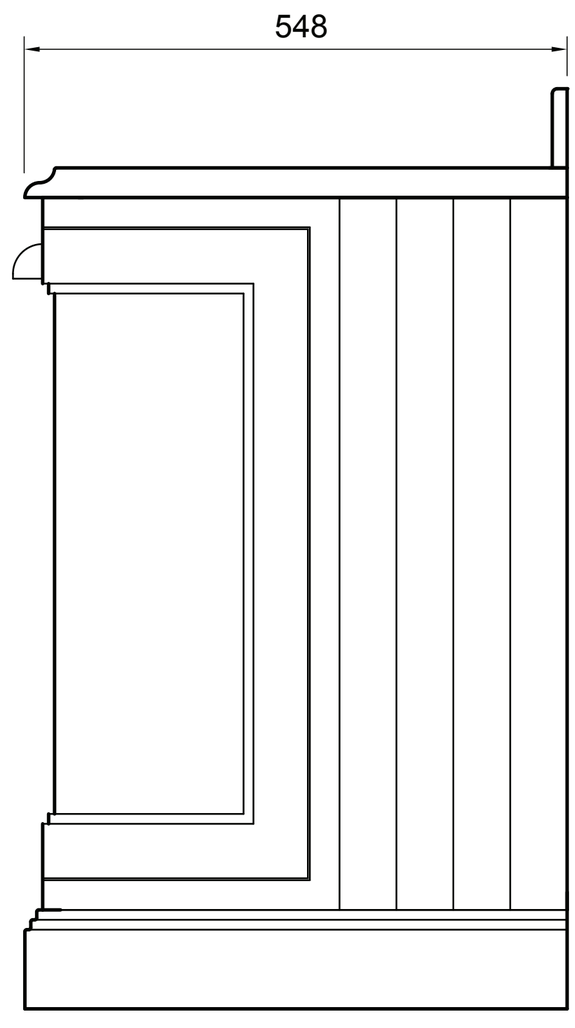

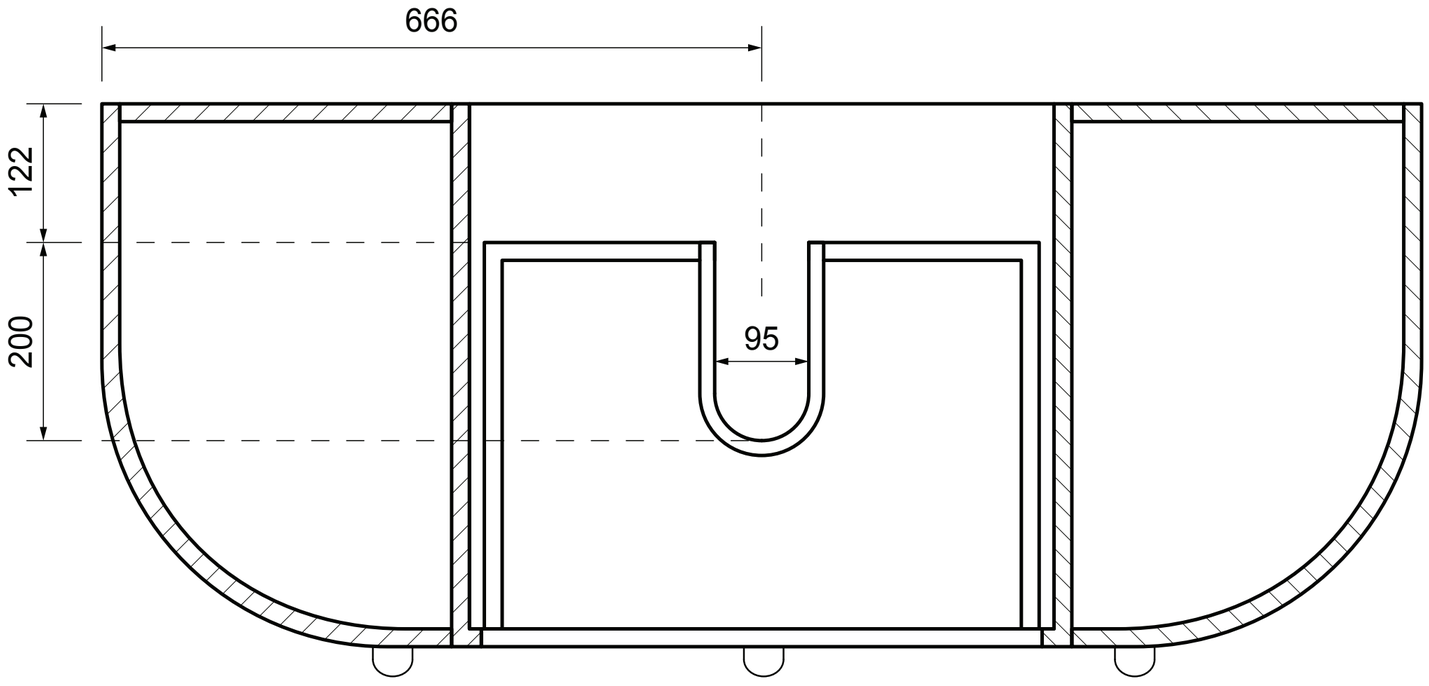

Name: Freestanding 1340 Curved Vanity
Code: FC4W