# ENGLISH CLASSIC /

# LAUNDRY

**DESCRIPTION**

450 Laundry Cabinet - 1 Drawer

**PRODUCT CODE**

VLUENG45D / VLUENG45DCC

| | |
|---|---|
| **Dimensions** | **W** 450 x **H** 920 x **D** 590 (mm) |
| **Finishes** | Matte English White or Matte Custom Colour Paint* |
| **Kordura** | Standard (White) or Colour* (Carrara Marble, Ariston, Ice Crystal, Peak Stone, Akashi Grey or Black Granite) |
| **Handle** | Pull Handle (Chrome, Black, Antique Pewter or Antique Bronze) |
| **Origin** | New Zealand made cabinetry |
| **Features** | 1 Drawers with soft-close, English Classic routered front in matte painted finish with your choice of pull handle. Choose one of our 7, matte Kordura top finishes (sold per 100mm). See website for all finish colours. Sinks sold separately. |

## TECHNICAL DRAWINGS

**Front**

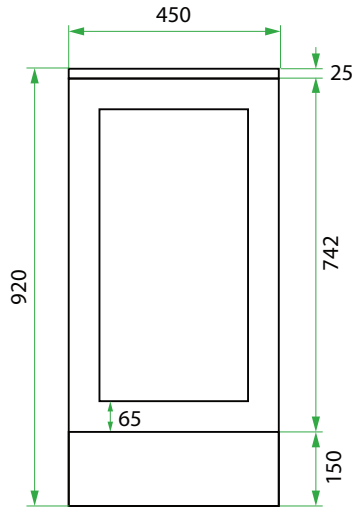


**Side**

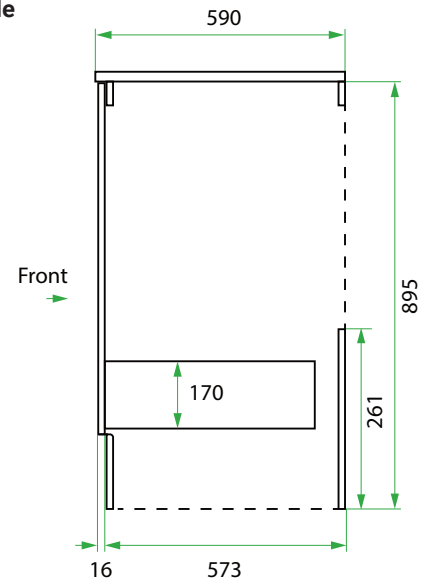


**Top Down**

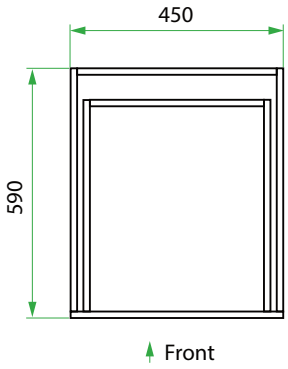


**NOTES**

*Additional Cost. Kordura top (H 25mm). Accessories not included. Drawing indicates the technical measurement only and is not a reflection of how the product will look. Sizes are nominal only. All drawings in millimeters. Drawings not to scale. June 2023.