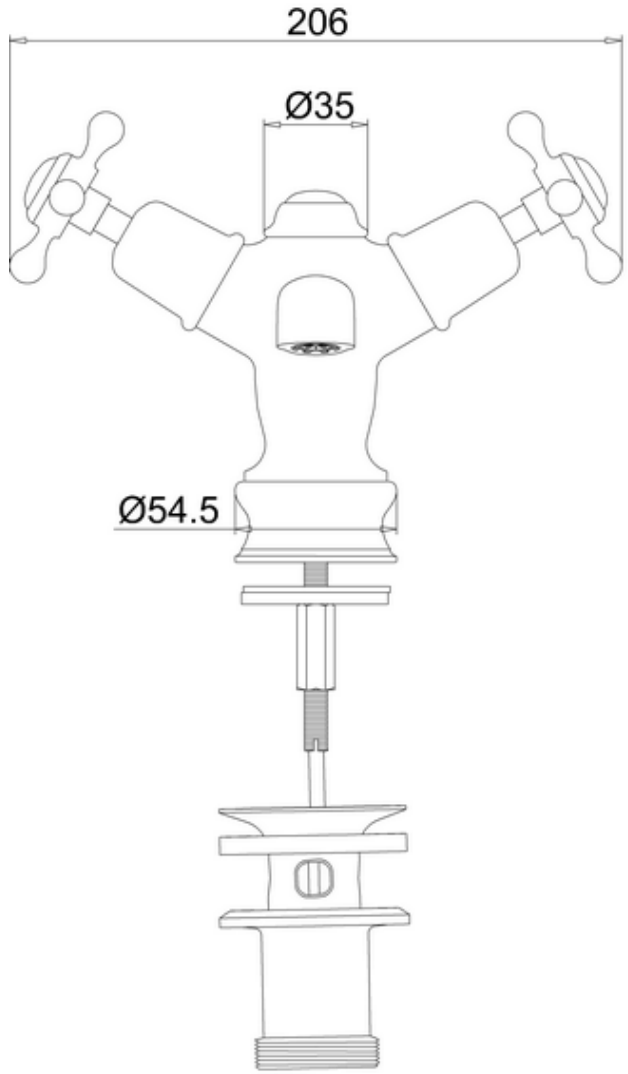
206
Ø35
Ø54.5

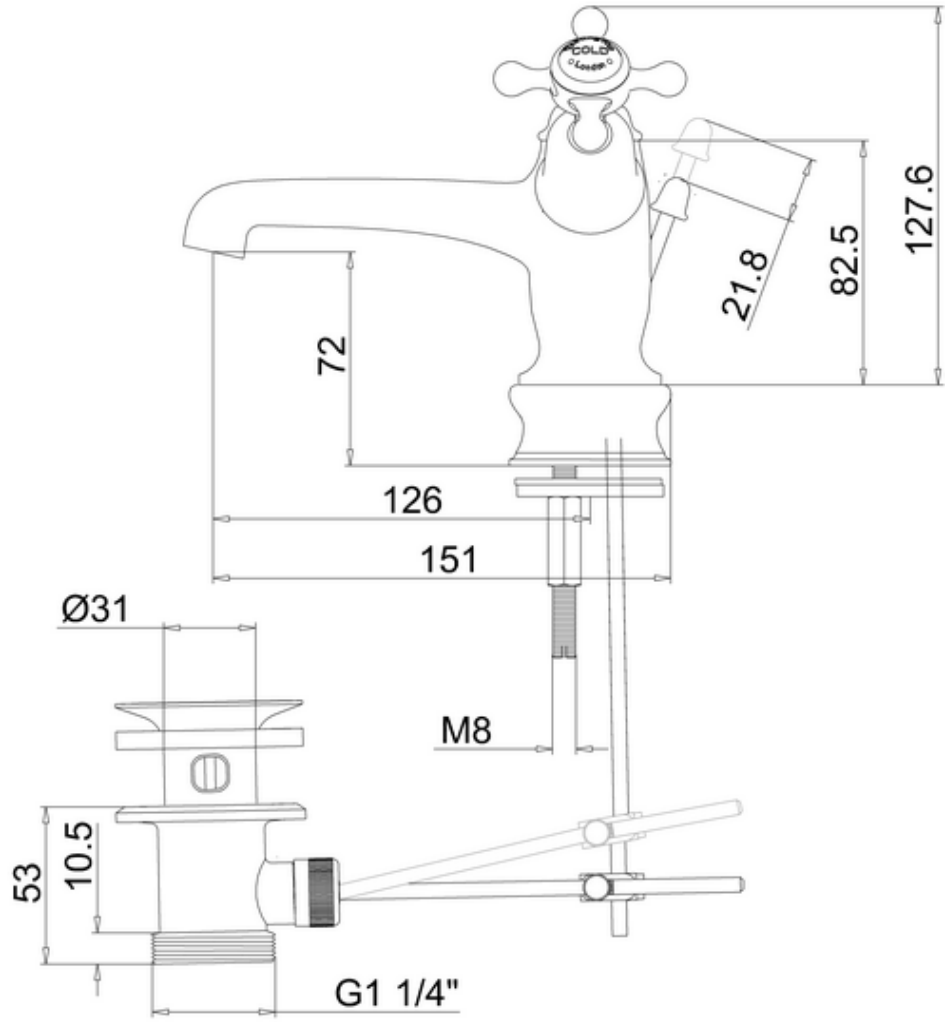
COLD
127.6
82.5
21.8
72
126
151
Ø31
M8
53
10.5
G1 1/4"