Burlington®

Beautifully Traditional
Classically styled bathrooms

Edwardian 56cm basin with standard pedestal

Code	Name
B4 1TH	Edwardian basin 56cm 1TH
P1	Pedestal

* price excludes taps & wastes

Finishes: White
Product Type: Traditional
Weight: 29.31 kg
Barcodes: B4 1TH (5055806001459),P1 (5055806005105)
Material: Vitreous China
Overall height: 90cm
Tap holes: Available with one (1TH) or two (2TH) tap holes
Size: 560 x 470 x 900 mm

Additional Information
The overflow is to solve the issue of a dripping tap if the plug is left in. It is not designed to take a flowing tap.
To order the correct tap hole configuration simply use 1TH or 2TH at the end of the basin product code.
The basin can be wall mounted with no pedestal or wash stand.
Not suitable for use on furniture.
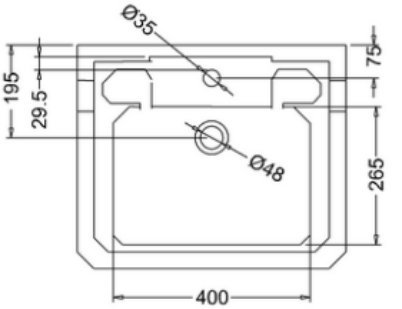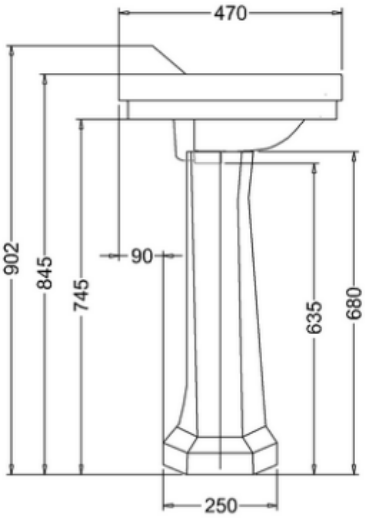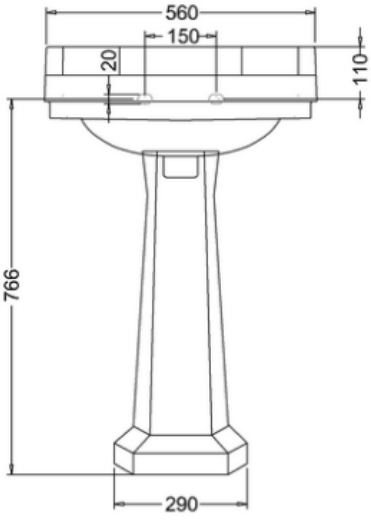
Compliance / Approvals
BS EN 14688:2006
Sanitary appliances. Wash basins. Functional requirements and test methods
BS EN 31:2011
Pedestal wash basins. Connecting dimensions